SYSTEM WIRING DIAGRAMS
3.4L (VIN E), Engine Performance Circuits (2 of 3)

1997 Pontiac Trans Sport

For DIAKOM-AUTO http://www.diakom.ru Taganrog support@diakom.ru (8634)315187

Copyright © 1998 Mitchell Repair Information Company, LLC
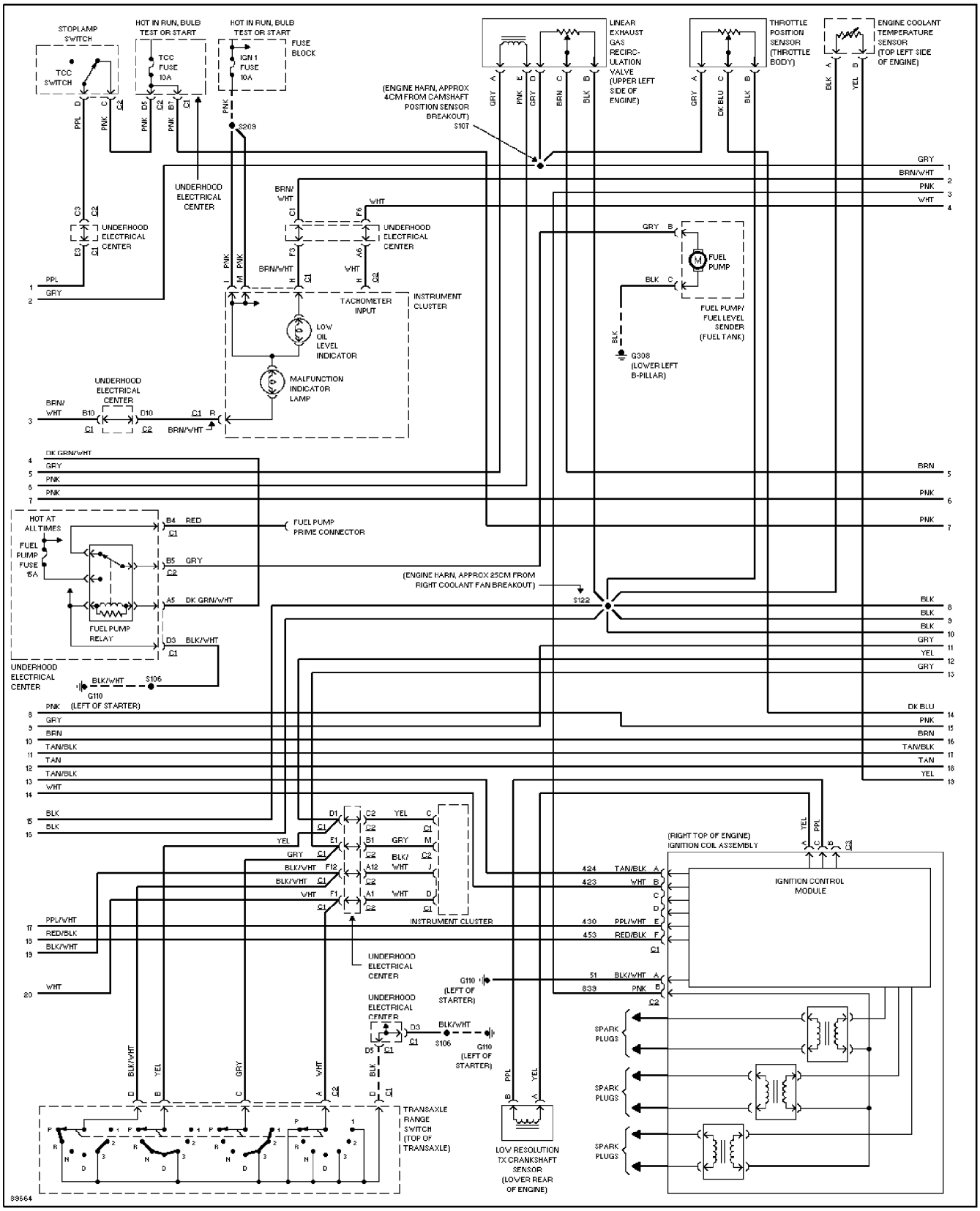
Tuesday, December 26, 2000 05:07PM